Lab 3: Loops and shift registers

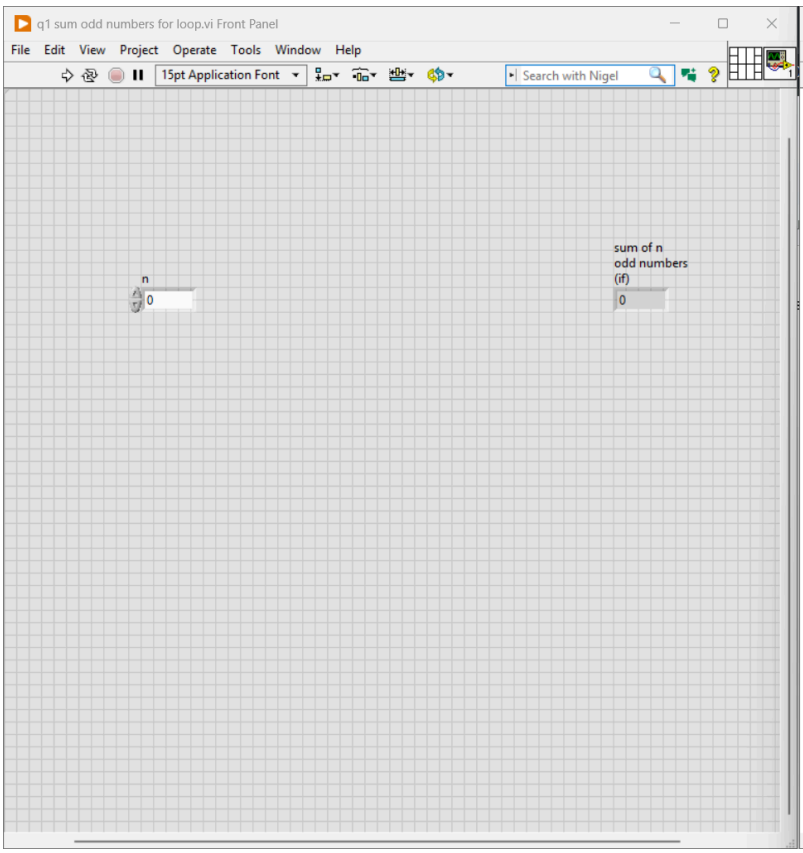

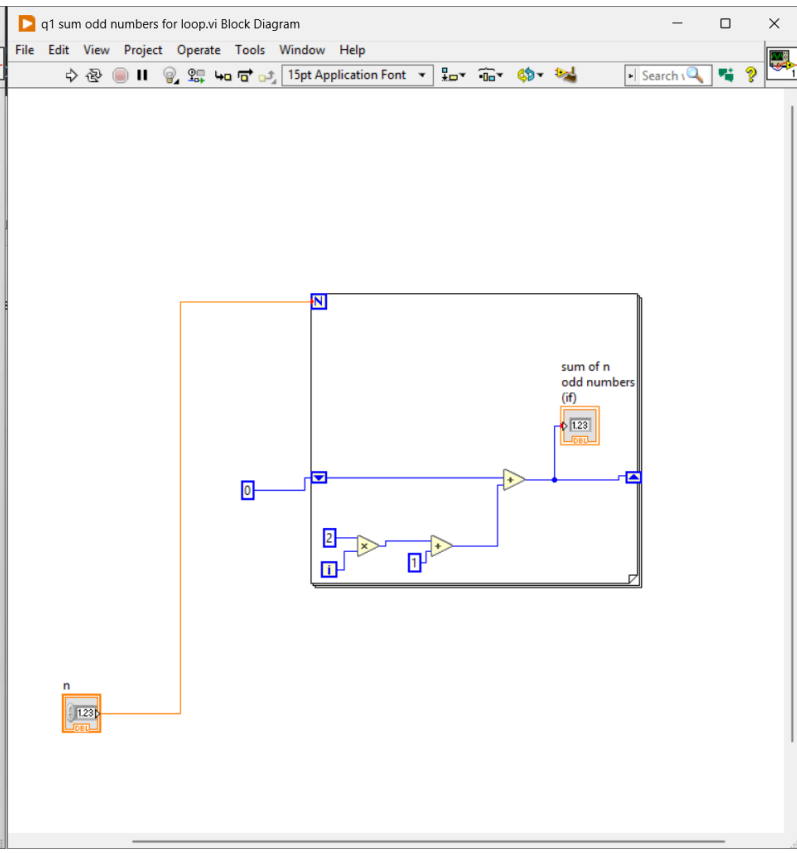

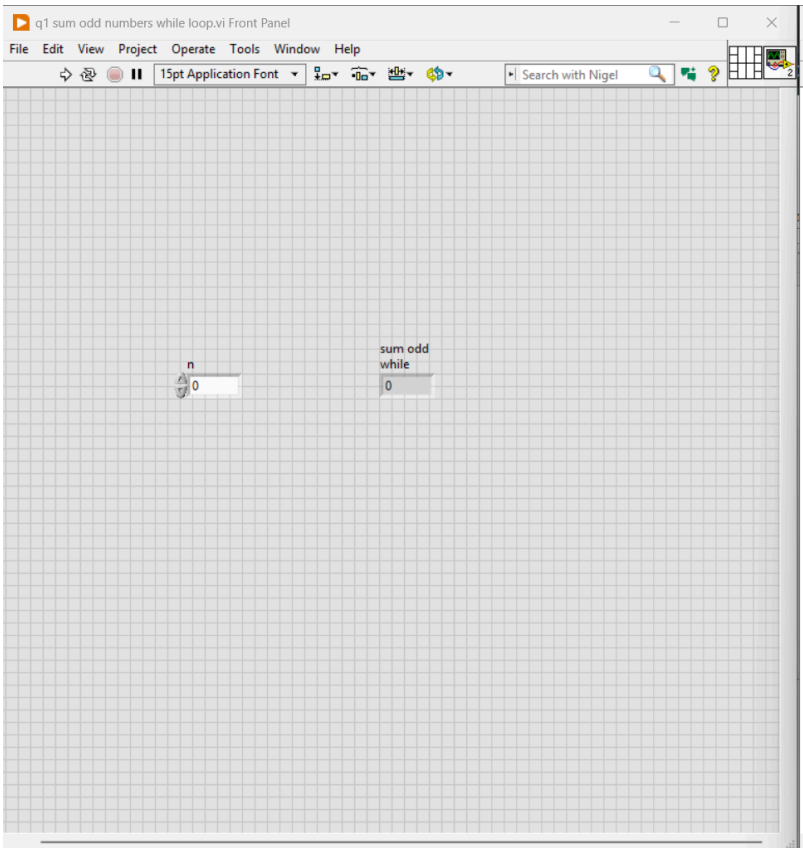

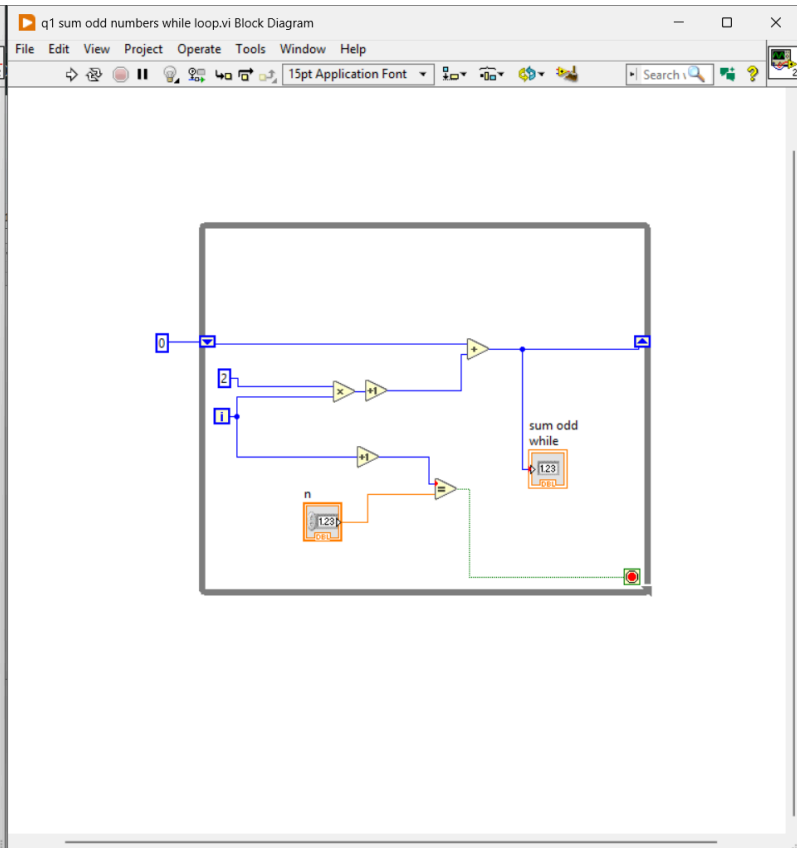

Lab 3: Loops and shift registers

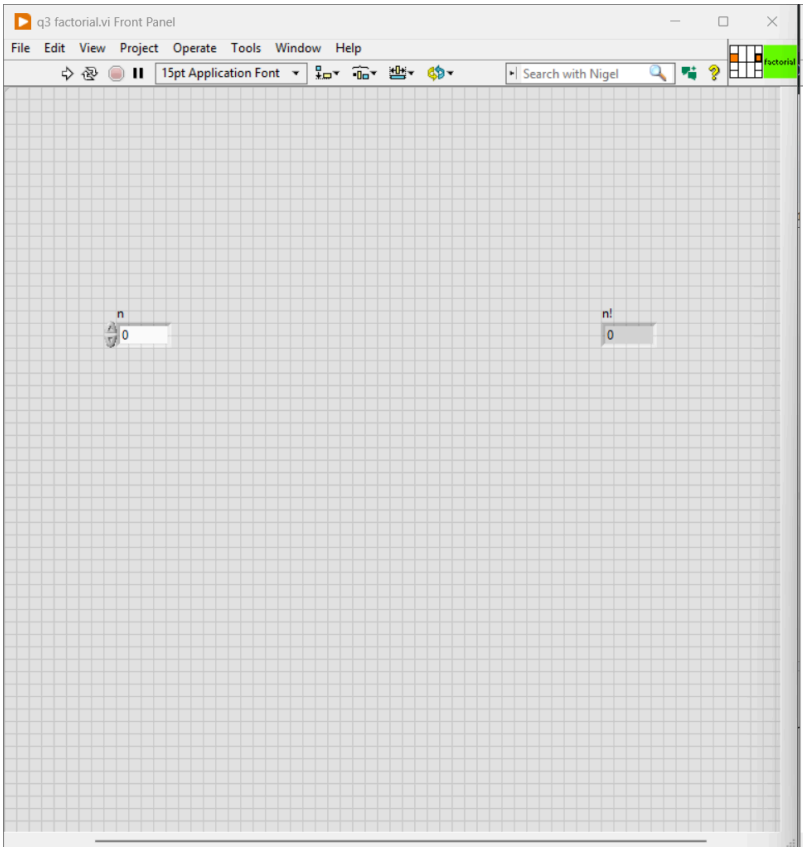

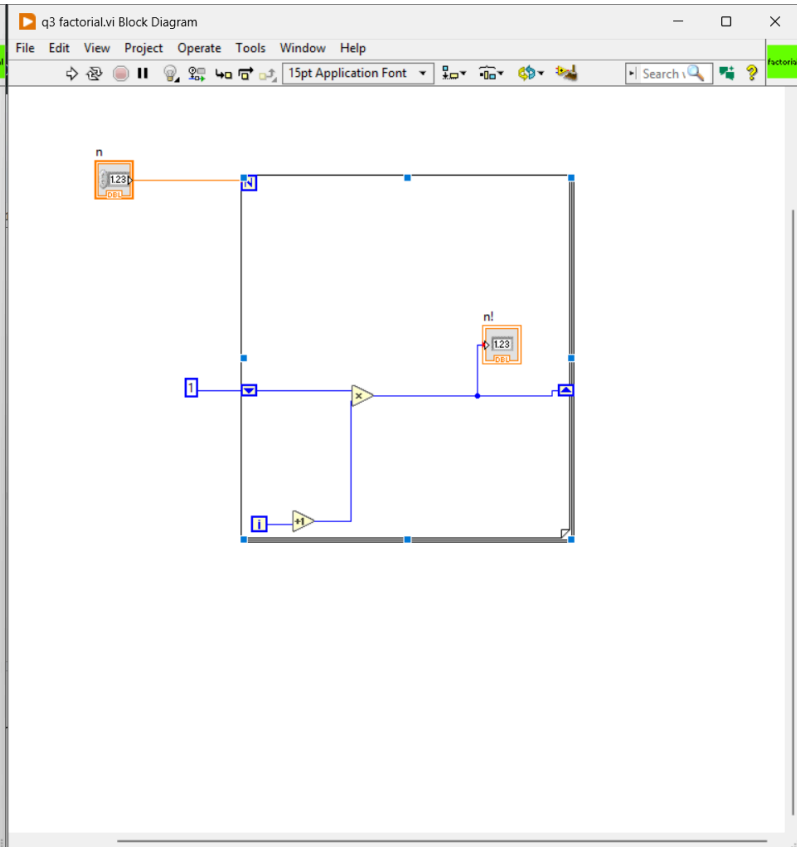

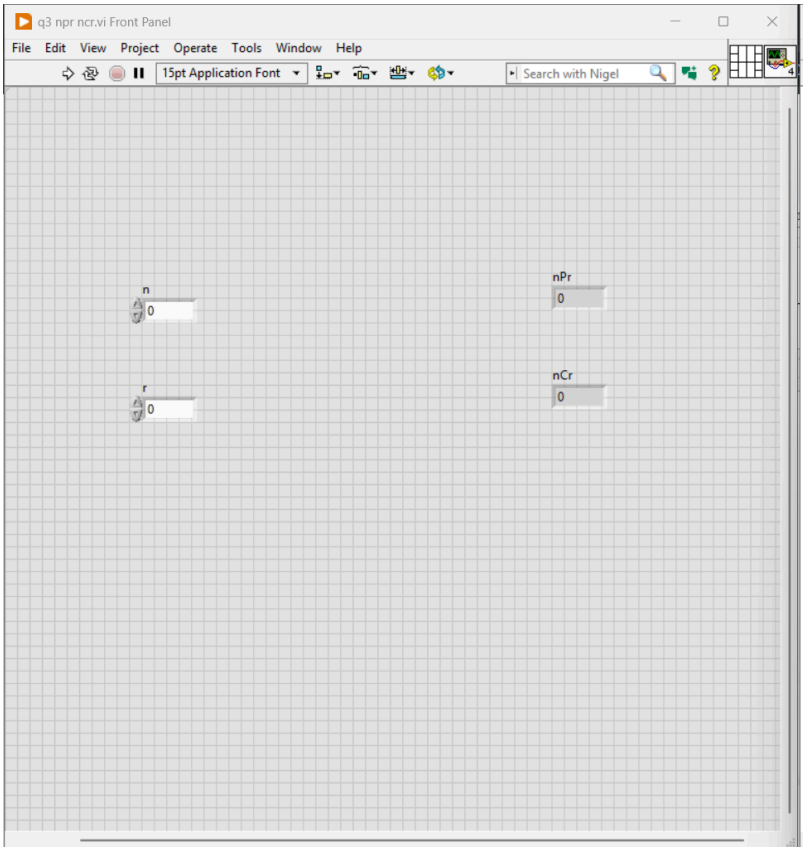

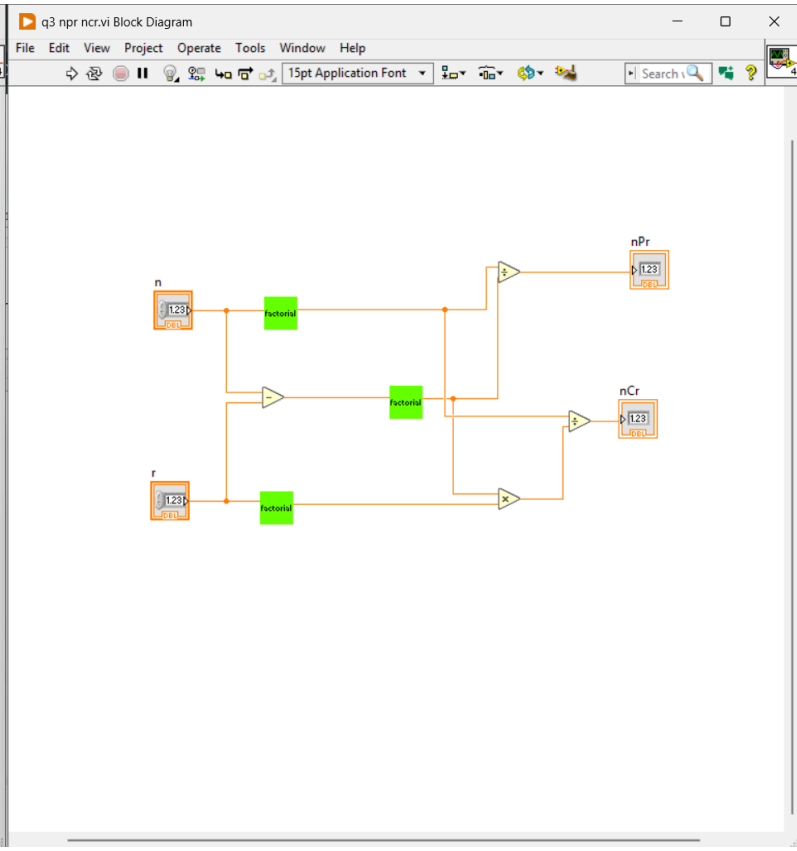

Lab 3: Loops and shift registers

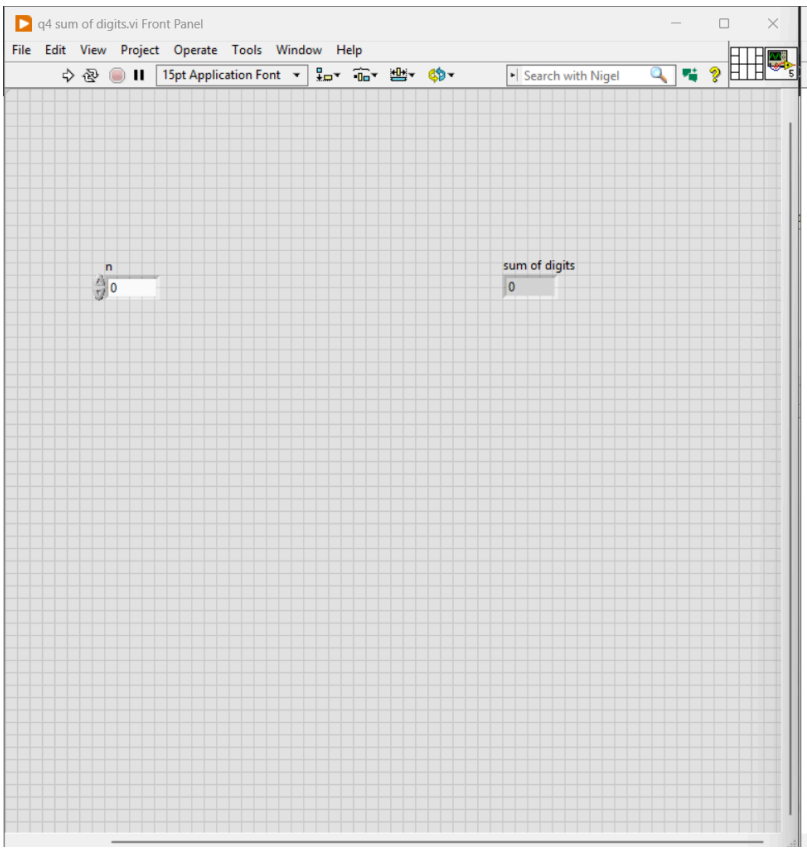

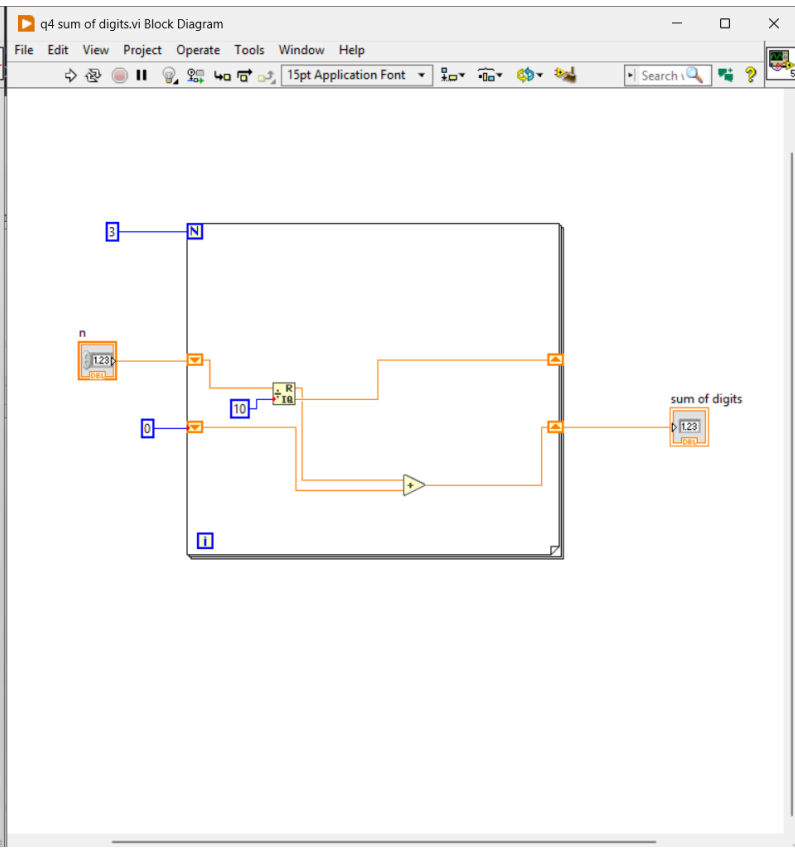

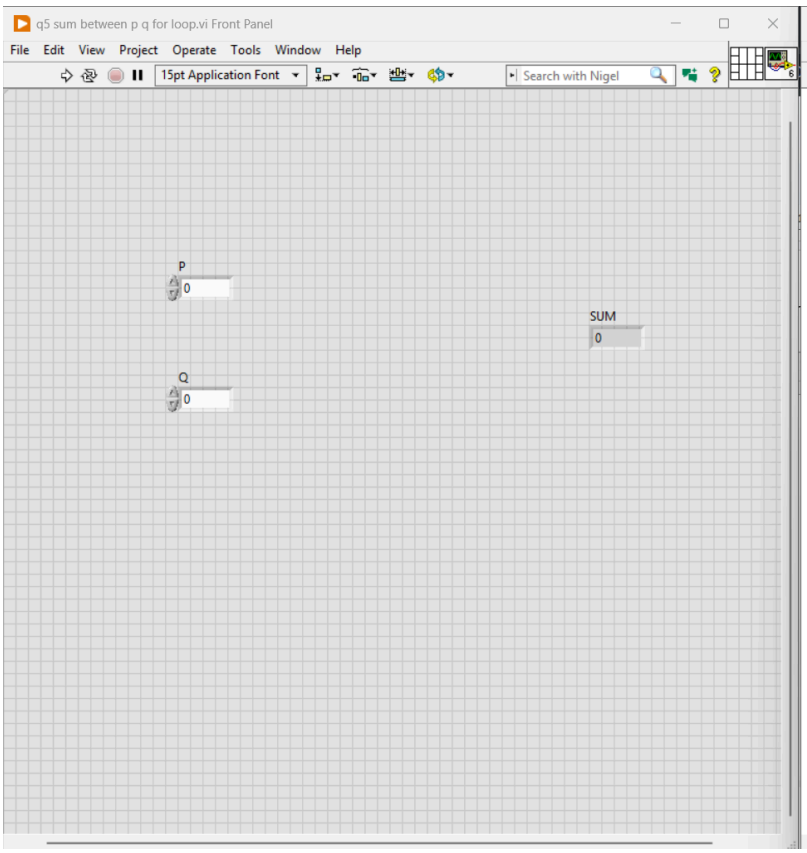

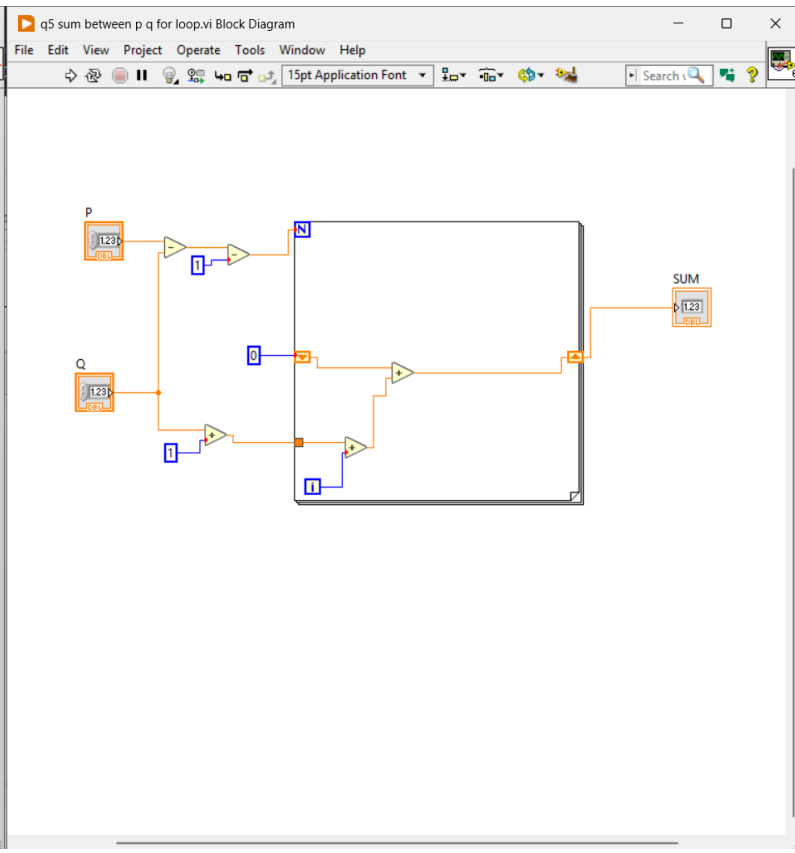
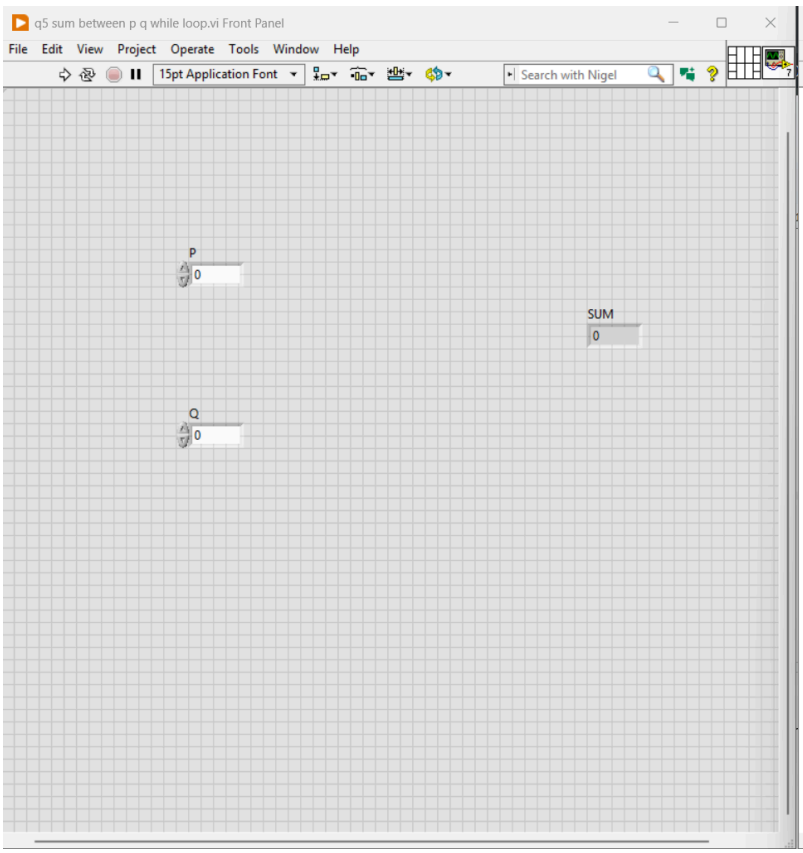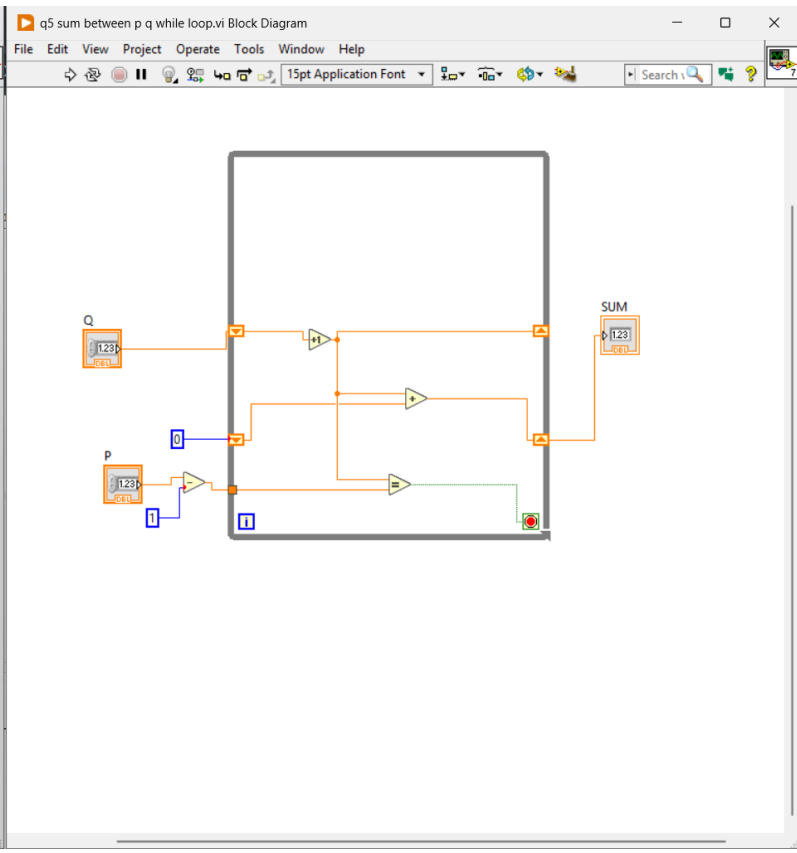
Lab 3: Loops and shift registers